KEOFITT
WORLD LEADERS IN STERILE SAMPLING™

QUICK COUPLING W9 FOR PTFE TUBE

ART. NO. 800091

GENERAL

KEOFITT has the widest selection of spare parts and accessories to complete your sampling system

Compatible with all KEOFITT sampling valves with W9 hose piece

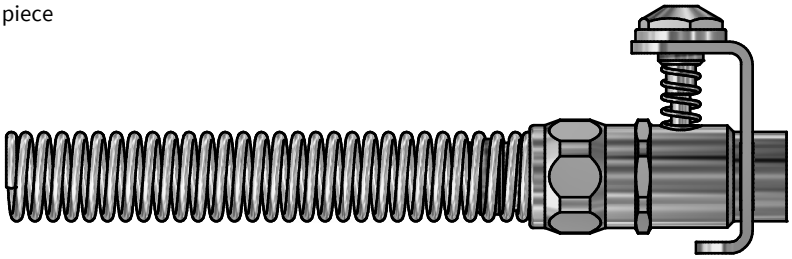

FEATURES

Connection: W9 hose piece in-/outlets

Outlet: Fitting for 10 x 1 PTFE tube

CERTIFICATION*

· Steel parts: · 3.1 Material Certificate
· O-ring: · EU EC 1935/2004 · EU EC 2023/2006 · DK No.822 06/2013 · FDA CFR 21 §177.2600 · REACH · RoHS
· ADI Free · TSE/BSE Free

TECHNICAL DATA

Materials

· Steel parts	AISI 316L (1.4404)
· O-ring	Silicone

Surface

· Outside	Electropolished
· Inside	Ra <= 0.5 µm (Quick Coupling only)

Pressure & Temperature

· Pressure	Working pressure depends on choice of valve head
· Temperature	Working temperature depends on choice of O-ring

Net Weight

· kg/lbs	0,085 kg /0,19 lbs

Spareparts

800830	10 PACK O-RING 10,3 x 2,4 SILICONE FDA

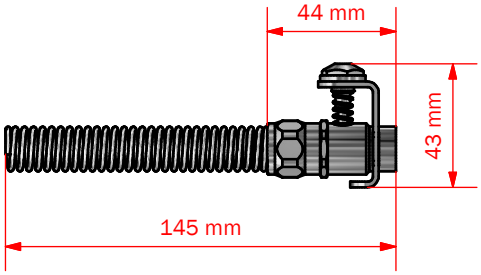

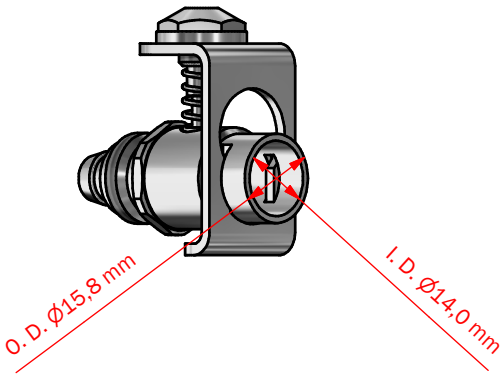

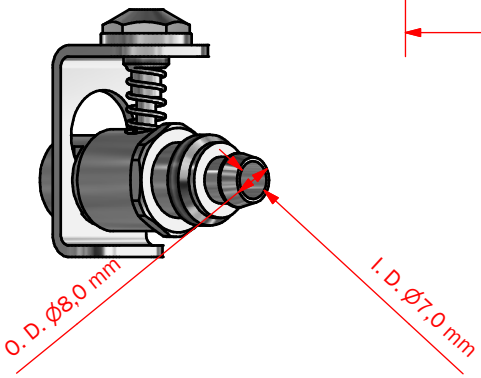

ISO 9001 : 2015 Management System Certification
BUREAU VERITAS Certification Denmark A/S

*For further information and download please visit keofitt.dk

Last updated 03-10-2017