NOTES

SPECIFICATIONS
1. RANGE: ± 0.25 INCHES
2. INPUT VOLTS, DC: 3V MIN., 30V MAX.
3. INPUT CURRENT: 40mA @ 24 V.
4. OUTPUT, FULL SCALE DC, OPEN CIRCUIT: ±7V @ 24 V INPUT
5. SCALE FACTOR VOLTS/INCH: 28 @ 24V INPUT
6. LINEARITY, % FULL SCALE: ± 0.5
7. INTERNAL CARRIER FREQ. Hz NOM.: 3600
8. RIPPLE (RMS) % NOM.: 0.8
9. OUTPUT IMPEDANCE: 5200Ω
10. FREQ. RESPONSE 3db DOWN Hz: 115
11. TEMP. RANGE: -65°F TO +250°F
12. RESOLUTION: INFINITE
13. TERMINATION: #22 AWG x 18" L'G. TEFLON INSUL. LEADS
14. MODEL NO. 0242-0003
15. NON-PRESSURE, COMPATIBLE WITH HYDRAULIC FLUID AND JET FUEL IMMERSION.

POLARITY OF EXCITATION MUST BE OBSERVED FOR PROPER FUNCTION. REVERSAL WILL NOT DAMAGE UNIT. POLARITY REVERSAL PROTECTED.

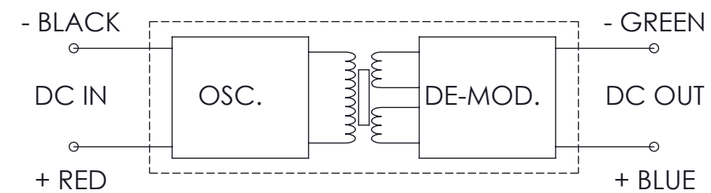

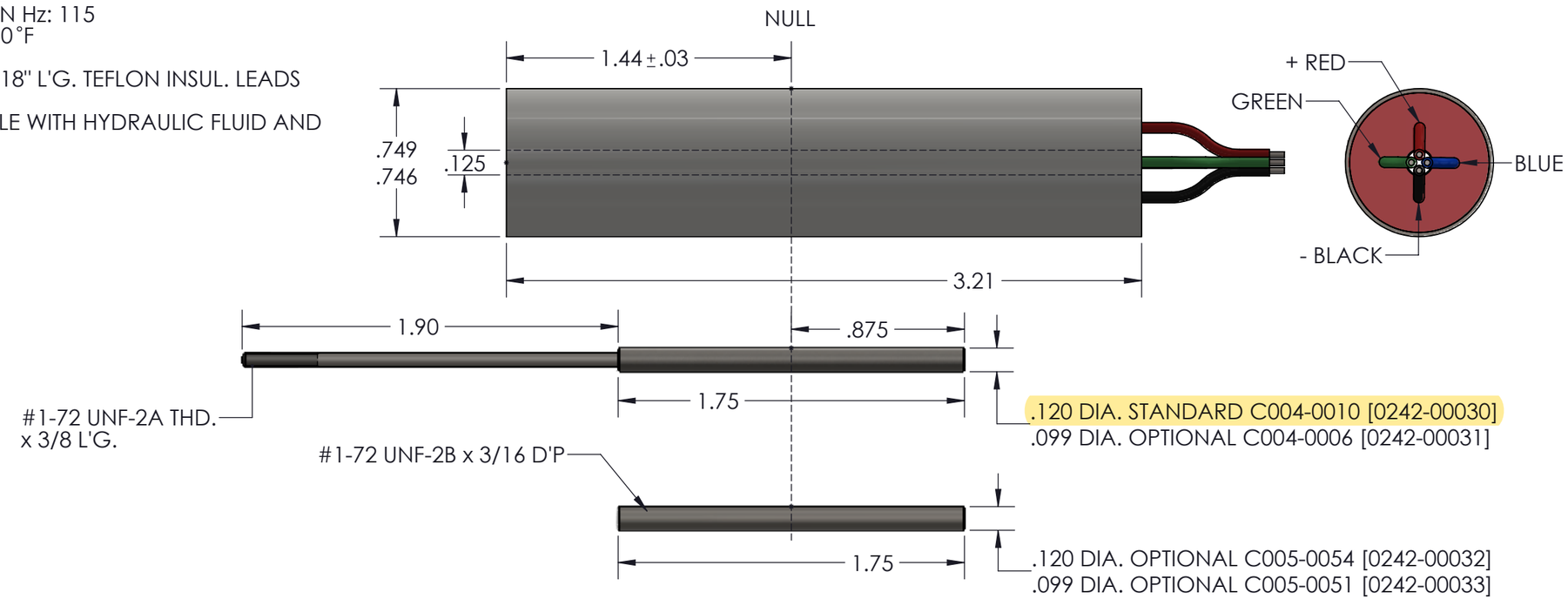

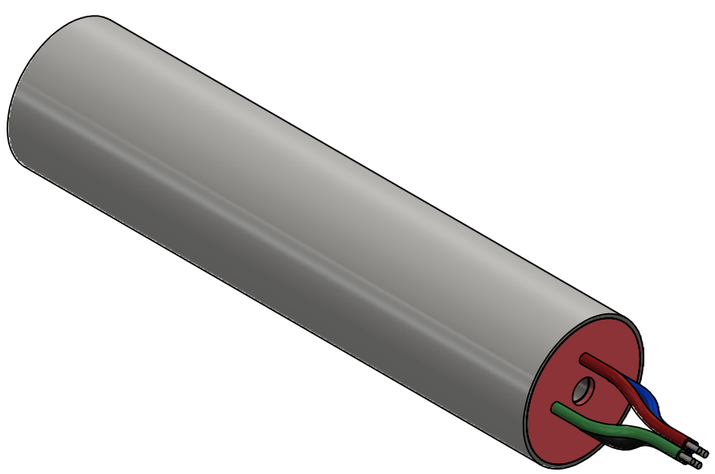

1ST. USED ON
0242-0003
REVISIONS

MATERIAL	FINISH	TOOLING

ALL MACH. SURF. MAX UNLESS OTHERWISE SPEC.

1. UNLESS OTHERWISE SPEC. ALL THDS. TO UN CLASS 2A OR 2B EFFECTIVE ENGAGEMENT TO BE 75% #6 AND UP, 60% #5 AND DOWN.
2. DIM. ( ) DENOTES OUT OF SCALE.
3. ALL DIM. SHOWN ARE AFTER PLATING.
4. EXCEPT AS NOTED, ALL DIMENSIONS ARE IN INCHES.

TOLERANCE (UNLESS OTHERWISE SPECIFIED)
X.X = ±.03
X.XX = ±.010
X.XXX = ±.005
ANGULAR = ±1°

SCALE: 3:2
DO NOT SCALE DWG.

DR'N. BY / DATE	MAB	10-12-12
CHECKED BY		
PROJ. ENG. APP.		
DEV. ENG. APP.		
MFG. ENG. APP.		

TRANS•TEK INCORPORATED
Route 83 Ellington, Connecticut 06029

TITLE
CONTROL DRAWING
DISPLACEMENT TRANSDUCER

DWG. SIZE	PART NO.	REV.
B	C012-0535	