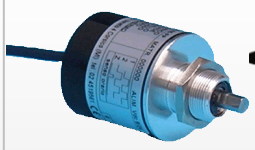

E40V

E40S

E40Q

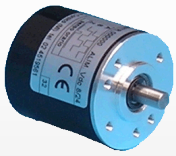

E40

INCREMENTAL ROTARY ENCODERS
Series E40

- ***Incremental rotary encoders with or without zero pulse***
- ***Pulses per revolution: 2 to 12500***
- ***Several configurations available***

MECHANICAL versions

E40/E41	E40A/E41A	E40V/E41V	E40Q/E41Q
Body Ø: 40 mm Round flange Shaft Ø: 6 or 4 mm	Body Ø: 40 mm Round flange with 4 holes on Ø 25.4 mm Shaft Ø: 6 or 4 mm	Body Ø: 40 mm Round flange, M18x1 screw fixing Shaft Ø: 6 or 4 mm	Body Ø: 40 mm Square flamge, mm 43x43 Shaft Ø: 6 or 4 mm

E40M/E41M	E40S/E41S	
Body Ø: 40 mm Hollow shaft flange Hole Ø 6 or 8 mm	Body Ø: 40 mm Hollow shaft flange Hole Ø 6 or 8 mm Fixing by antirotational elastic support	**ABS plastic case** Connections outlet: axial or radial cable **Aluminium case** (type X..) Connections outlet: cable gland in radial position

MECHANICAL & ENVIRONMENTAL SPECIFICATIONS

	E4/0E41	E40A/E41A	E40V/41V	E40Q/E41Q	E40M/E41M	E40/E41S
• Materials: case shaft	ABS / aluminium (type X..) AISI 303 steel					
• Weight	95 g ca.					
• Shaft diameter	4 or 6 mm				Hole 8 or 6 mm	
• Revolutions/minute	6000					
• Starting torque	≤0,2 Ncm					
• Inertia	≤5 g cm^2					
• Max load	10N axial / 20N radial					
• Vibration resistance (10÷2000 Hz)	10 G					
• Shock resistance (11 ms)	30 G					
• Protection degree	IP54 (optional IP65 with metal case and cable gland)					
• Operating temperature	-10 ÷ 60°C					
• Stocking temperature	-20 ÷ 80°C					

POPHOF Antriebstechnik, Tel.: +49(0)7821-983913, Fax: +49(0)7821-983914
Senefelderstr. 3, DE-77933 Lahr, info@pophof.de, www.pophof.de

ELAP VIA VITTORIO VENETO, 4 – I-20094 CORSICO (MI) TEL. ++39.02.4519561
FAX ++39.02.45103406 E-MAIL: INFO@ELAP.IT WWW.ELAP.IT

E40M

E40AX27

E40

E40AX27

ELECTRICAL & OPERATING SPECIFICATIONS

• Pulse code	Incremental
• Pulses/revolution	2 ÷ 12500
• Zero pulse	One pulse/revolution
• Output signals	Two square waves 90° ±15° out of phase – Zero pulse width: 90°±15°
• Electronic output	push-pull, NPN open collector, 5Vdc or 8/24Vdc line driver signals protected against short circuits
• Supply voltage	5Vdc or 8/24Vdc - protection against polarity reversal
• Absorption	40 mA max
• Max. frequency	100/150 KHz
• Connections	Axial or radial cable 1 m long Optional: radial cablepress, 5-pin Lumberg or DB9 axial connector

CONNECTIONS

Push/Pull – NPN Open Collector Output		Line Driver Output	
SIGNALS	Cable Colours	SIGNALS	Cable Colours
Out 1	White	Out 1	White
Out 2	Green	Out 2	Green
Out Z(E41)	Yellow	Out Z (E41)	Grey
+ Vdc	Red	+ Vdc	Red
0V	Blue	0V	Blue
Earth	Shield	Out 1	Brown
		Out 2	Yellow
		Out Z	Pink
		Earth	Shield

ORDERING INFORMATION

E40 — ***TYPE***
E40/E41
E40A/E41A
E40V/E41V
E40Q/E41Q
E40M/E41M
E40S/E41S

1000 — ***PPR NO.***
2 ÷ 12500

824 — ***SUPPLY VOLTAGE***
8/24 Vdc
5 Vdc

R — ***CONNECTIONS POSITION***
A Axial
R Radial

6 — ***SHAFT/HOLE DIAMETER***
6 mm
4 mm
8 mm

PP — ***ELECTRONIC OUTPUT***
PP Push-pull
OC Open Collector NPN
LD Line-driver

VARIATIONS ADMITTED WITHOUT NOTICE

Dimensional drawings available at
www.elap.it/eng/incremental-encoders/encoder-e40.html

POPHOF Antriebstechnik, Tel.: +49(0)7821-983913, Fax: +49(0)7821-983914
Senefelderstr. 3, DE-77933 Lahr, info@pophof.de, www.pophof.de

ELAP VIA VITTORIO VENETO, 4 – I-20094 CORSICO (MI) TEL. ++39.02.4519561
FAX ++39.02.45103406 E-MAIL: INFO@ELAP.IT WWW.ELAP.IT

DIMENSIONS

E40

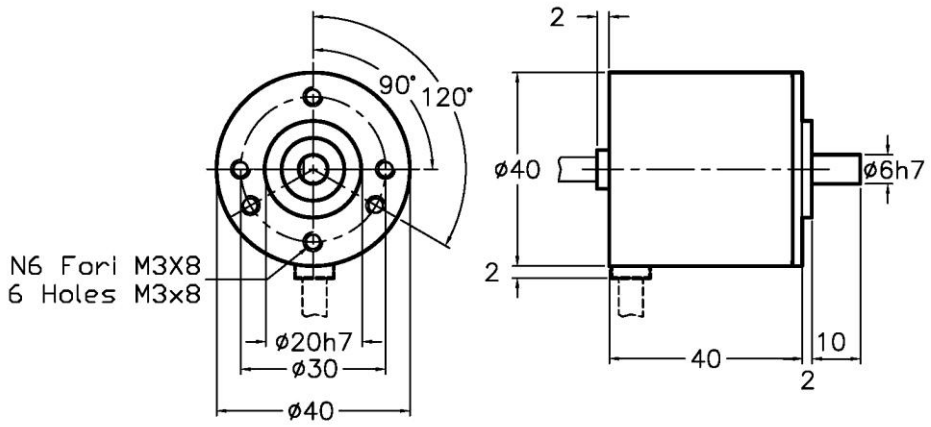

E40Q

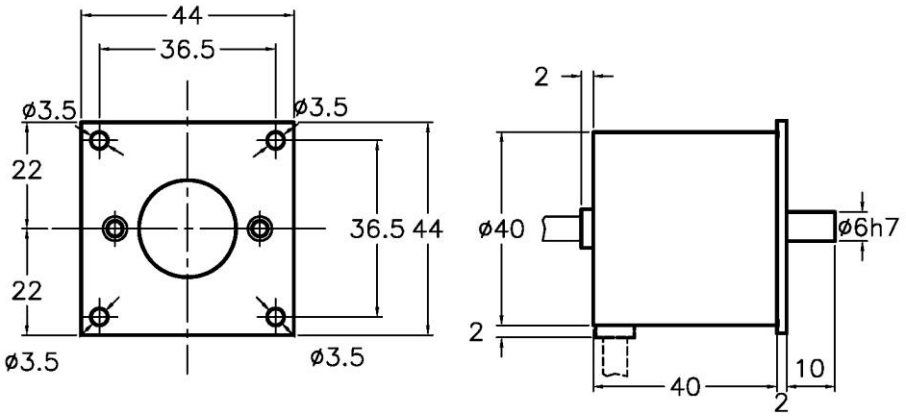

E40V

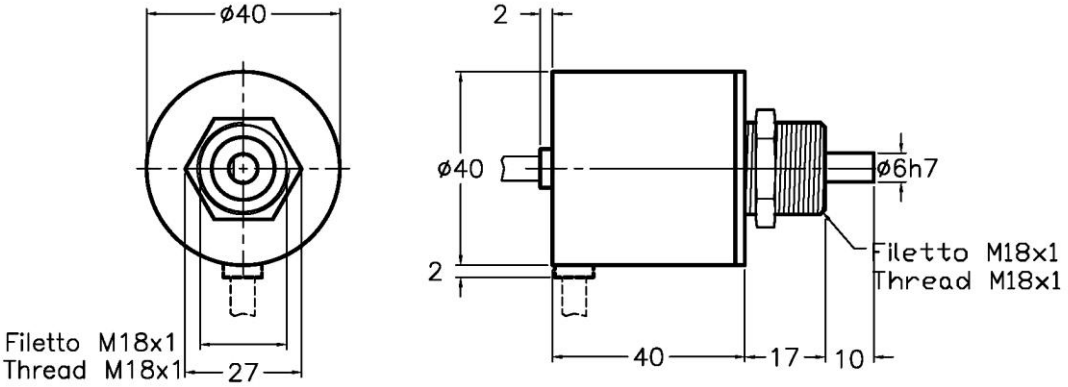

POPHOF Antriebstechnik, Tel.: +49(0)7821-983913, Fax: +49(0)7821-983914
Senefelderstr. 3, DE-77933 Lahr, info@pophof.de, www.pophof.de

ELAP VIA VITTORIO VENETO, 4 – I-20094 CORSICO (MI) TEL. ++39.02.4519561
FAX ++39.02.45103406 E-MAIL: INFO@ELAP.IT WWW.ELAP.IT

DIMENSIONS

E40A

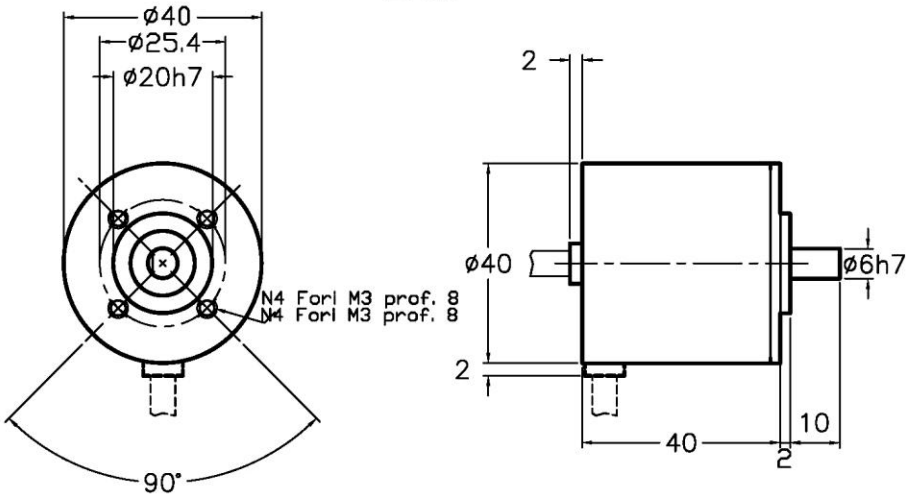

E40S

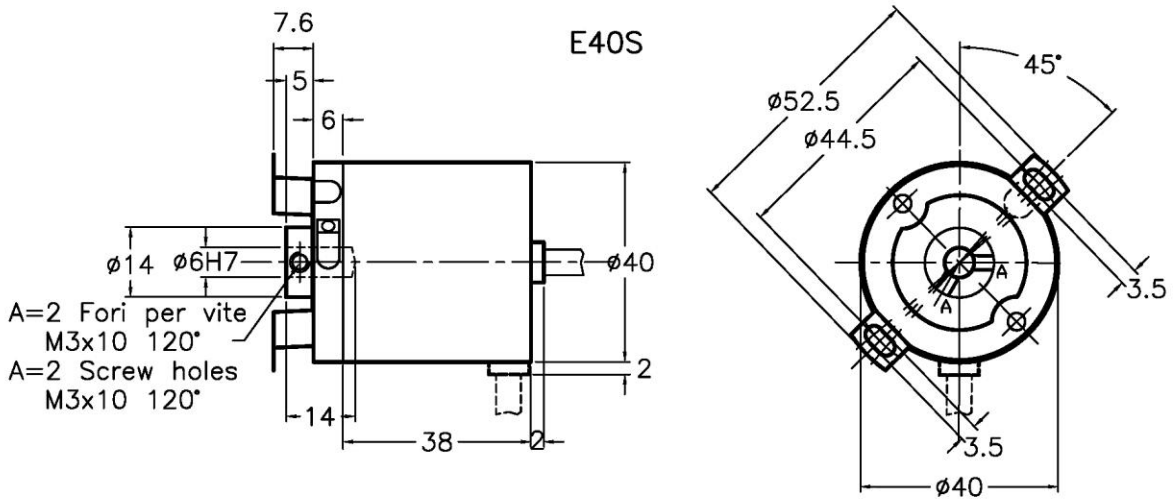

E40M

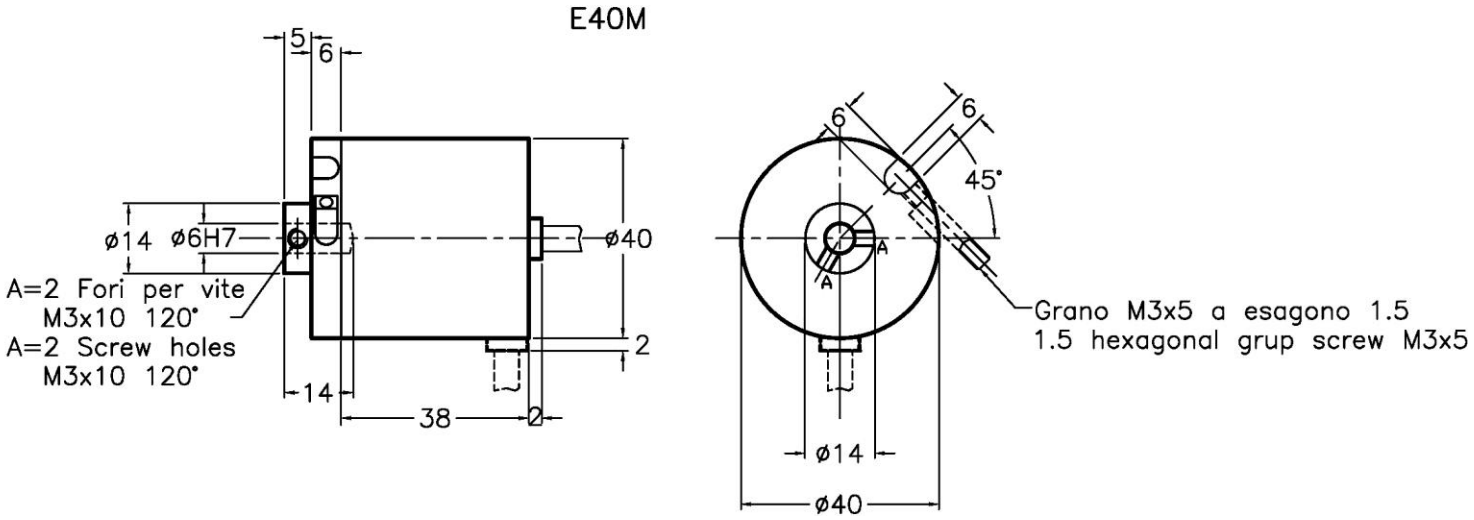

Dimensional drawings available at
www.elap.it/eng/incremental-encoders/encoder-e40.html

POPHOF Antriebstechnik, Tel.: +49(0)7821-983913, Fax: +49(0)7821-983914
Senefelderstr. 3, DE-77933 Lahr, info@pophof.de, www.pophof.de

ELAP VIA VITTORIO VENETO, 4 – I-20094 CORSICO (MI) TEL. ++39.02.4519561
FAX ++39.02.45103406 E-MAIL: INFO@ELAP.IT WWW.ELAP.IT