Flat fan nozzle tips with dovetail guide Series 660

Automatic jet alignment due to dovetail guide (this tip requires dovetail base). Stable spray angle. Uniform parabolic distribution of liquid. With appropriate spray height and distance between centers on spray bar, provides an even total liquid distribution. Assembles with 3/8" retaining nut.

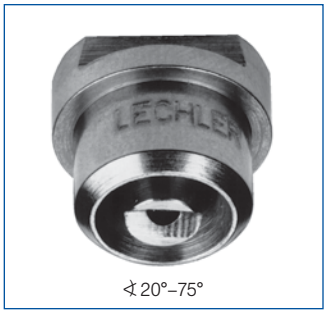

∢ 20°–75°

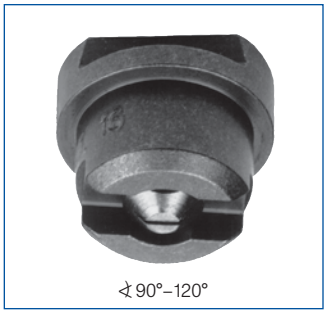

∢ 90°–120°

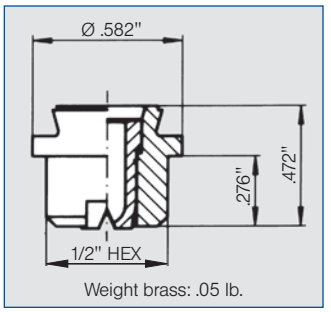

Weight brass: .05 lb.

Orifice offset from dovetail by 5°

Applications:
- Cleaning installations
- Cooling headers
- Spray pipes

∢ Spray angle	Ordering no. Type	Material no. 303 SS 16	Material no. 316 SS 17	Material no. Brass 30	Equivalent Orifice diam. (in.)	Free passage (in.)	Flow Rate (Gallons Per Minute) 10 psi	20 psi	liters per minute 2 bar	40 psi	60 psi	80 psi	100 psi	Spray Coverage @ 30 psi H=10"	H=20"
20°	660. 301	○	○	○	.028	.024	.05	.07	.32	.10	.12	.14	.16	2	4
	660. 361	○	○	○	.039	.032	.10	.14	.63	.20	.24	.28	.31	3	5
	660. 441	○	○	○	.053	.043	.19	.27	1.3	.39	.48	.55	.61	3	5
	660. 481	○	○	○	.059	.047	.25	.35	1.6	.50	.61	.70	.78	3	5
30°	660. 302	○	○	○	.024	.020	.05	.07	.32	.10	.12	.14	.16	4	8
	660. 362	○	○	○	.039	.028	.10	.14	.63	.20	.24	.28	.31	4	8
	660. 402	○	○	○	.047	.035	.16	.22	1.0	.31	.38	.44	.49	4	8
	660. 482	○	○	○	.059	.043	.25	.35	1.6	.50	.61	.70	.78	4	8
	660. 562	○	○	○	.079	.059	.39	.55	2.5	.78	.95	1.1	1.2	4	8
45°	660. 303	○	○	○	.028	.020	.05	.07	.32	.10	.12	.14	.16	7	13
	660. 363	○	○	○	.039	.024	.10	.14	.63	.20	.24	.28	.31	7	13
	660. 403	○	○	○	.047	.035	.16	.22	1.0	.31	.38	.44	.49	7	13
	660. 483	○	○	○	.059	.043	.25	.35	1.6	.50	.61	.70	.78	7	13
	660. 563	○	○	○	.079	.055	.39	.55	2.5	.78	.95	1.1	1.2	7	14
	660. 643	○	○	○	.099	.071	.62	.88	4.0	1.2	1.5	1.8	2.0	7	14
60°	660. 304	○	○	○	.028	.016	.05	.07	.32	.10	.12	.14	.16	11	21
	660. 334	○	○	○	.035	.020	.07	.10	.45	.14	.17	.20	.22	11	21
	660. 364	○	○	○	.039	.024	.10	.14	.63	.20	.24	.28	.31	11	21
	660. 404	○	○	○	.047	.032	.16	.22	1.0	.31	.38	.44	.49	11	21
	660. 444	○	○	○	.053	.035	.19	.27	1.3	.39	.48	.55	.61	11	21
	660. 484	○	○	○	.059	.039	.25	.35	1.6	.50	.61	.70	.78	11	21
	660. 514	○	○	○	.065	.043	.29	.42	1.9	.59	.72	.83	.93	11	21
	660. 564	○	○	○	.079	.051	.39	.55	2.5	.78	.95	1.1	1.2	11	21
	660. 604	○	○	○	.087	.059	.49	.69	3.2	.98	1.2	1.4	1.5	11	21
	660. 644	○	○	○	.099	.063	.62	.88	4.0	1.2	1.5	1.8	2.0	11	21
	660. 724	○	○	○	.118	.083	.98	1.4	6.3	2.0	2.4	2.8	3.1	11	20
	660. 804	-	○	○	.158	.102	1.6	2.2	10.0	3.1	3.8	4.4	4.9	11	20
75°	660. 145	○	-	○	.008	.005	.008	.011	.05	.016	.019	.022	.025	13	24
	660. 165	○	-	○	.008	.003	.011	.015	.07	.022	.027	.031	.034	13	24
	660. 185	○	-	○	.008	.006	.012	.018	.09	.025	.030	.035	.039	13	25
	660. 215	○	-	○	.020	.008	.017	.024	.11	.034	.042	.048	.054	13	25
	660. 245	○	-	○	.020	.300	.025	.035	.16	.05	.06	.07	.08	14	25
	660. 275	○	-	○	.024	.300	.034	.05	.22	.07	.08	.10	.11	14	25

Continued on next page.

Example for ordering:	Type	+	Material no.	=	Ordering no.
	660. 304	+	16	=	660. 304. 16

1) We reserve the right to deliver material 316 SS or 316L SS, if we show the material code 17.

A listing of alternatives for various assembly possibilities is shown in the Accessories section beginning on page 123.

Conversion formula for the above series: $V_2 = V_1 \sqrt{\frac{P_2}{P_1}}$

(See page 12 for symbol definitions.)

Flat fan nozzle tips with dovetail guide Series 660

Spray angle	Ordering no. Type	Material no. 303 SS 16	316 SS 17	Brass 30	Equivalent Orifice diam. (in.)	Free passage (in.)	Flow Rate (Gallons Per Minute) 10 psi	20 psi	liters per minute 2 bar	40 psi	60 psi	80 psi	100 psi	Spray Coverage @ 30 psi H=10"	H=20"
90°	660. 216	○	-	○	.016	.200	.017	.024	.11	.034	.042	.048	.054	20	35
	660. 276	○	-	○	.024	.300	.034	.05	.22	.07	.08	.10	.11	20	35
	660. 306	○	○	○	.028	.016	.05	.07	.32	.10	.12	.14	.16	20	37
	660. 336	○	○	○	.035	.020	.07	.10	.45	.14	.17	.20	.22	20	37
	660. 366	○	○	○	.039	.020	.10	.14	.63	.20	.24	.28	.31	20	37
	660. 406	○	○	○	.047	.028	.16	.22	1.0	.31	.38	.44	.49	20	37
	660. 446	○	○	○	.053	.032	.19	.27	1.3	.39	.48	.55	.61	20	36
	660. 486	○	○	○	.059	.032	.25	.35	1.6	.50	.61	.70	.78	20	36
	660. 516	○	○	○	.065	.035	.29	.42	1.9	.59	.72	.83	.93	20	36
	660. 566	○	○	○	.079	.043	.39	.55	2.5	.78	.95	1.1	1.2	20	36
	660. 606	○	○	○	.087	.047	.49	.69	3.2	.98	1.2	1.4	1.5	20	36
	660. 646	○	○	○	.099	.051	.62	.88	4.0	1.2	1.5	1.8	2.0	20	36
	660. 676	○	○	○	.106	.055	.74	1.0	4.8	1.5	1.8	2.1	2.3	19	36
	660. 726	○	○	○	.118	.067	.98	1.4	6.3	2.0	2.4	2.8	3.1	19	35
	660. 806	○	○	○	.158	.095	1.6	2.2	10.0	3.1	3.8	4.4	4.9	19	34
120°	660. 187	○	-	○	.014	.008	.012	.018	.08	.025	.030	.035	.039	26	48
	660. 217	○	-	○	.016	.008	.017	.024	.11	.034	.042	.048	.054	26	48
	660. 247	○	-	○	.020	.008	.025	.035	.16	.05	.06	.07	.08	26	49
	660. 277	○	-	○	.024	.012	.034	.05	.22	.07	.08	.10	.11	26	49
	660. 307	○	-	○	.028	.012	.05	.07	.32	.10	.12	.14	.16	26	50
	660. 337	○	○	○	.035	.016	.07	.10	.45	.14	.17	.20	.22	26	50
	660. 367	○	○	○	.039	.016	.10	.14	.63	.20	.24	.28	.31	26	50
	660. 407	○	○	○	.047	.024	.16	.22	1.0	.31	.38	.44	.49	26	50
	660. 447	○	○	○	.053	.024	.19	.27	1.3	.39	.48	.55	.61	26	50
	660. 487	○	○	○	.059	.024	.25	.35	1.6	.50	.61	.70	.78	27	50
	660. 517	○	○	○	.065	.035	.29	.42	1.9	.59	.72	.83	.93	27	50
	660. 567	○	○	○	.079	.035	.39	.55	2.5	.78	.95	1.1	1.2	27	50
	660. 607	○	○	○	.087	.043	.49	.69	3.2	.98	1.2	1.4	1.5	27	51
	660. 647	○	○	○	.099	.051	.62	.88	4.0	1.2	1.5	1.8	2.0	28	51
	660. 727	○	○	○	.118	.063	.99	1.4	6.4	2.0	2.4	2.8	3.1	29	52
	660. 807	○	-	○	.158	.079	1.6	2.2	10.0	3.1	3.8	4.4	4.9	31	53

Example for ordering:	Type	+	Material no.	=	Ordering no.
	660. 306	+	16	=	660. 306. 16

1) We reserve the right to deliver material 316 SS or 316L SS, if we show the material code 17.

Accessories

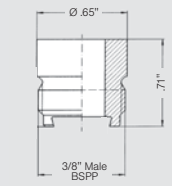

Weight: .05 lb.

Nipple **066. 011. 17** (316 SS)

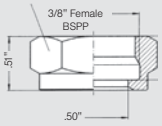

Weight: .06 lb.

Retaining nut **065. 200. 16** (303 SS)
065. 200. 17 (316 SS)
065. 200. 30 (Brass)

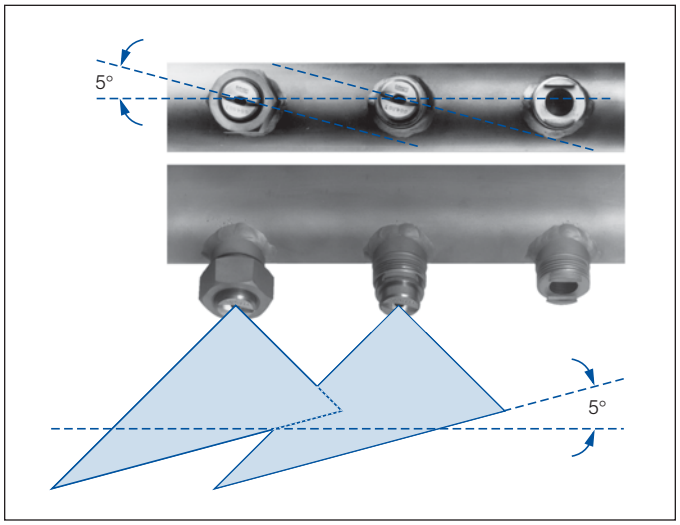

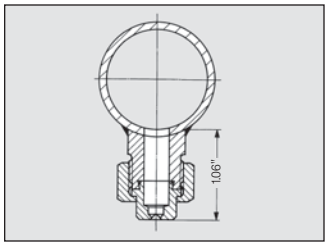

Standard accessories, alignment, and installation for the Series 660 dovetail nozzle tip

A listing of alternatives for various assembly possibilities is shown in the Accessories section beginning on page 123.

Conversion formula for the above series: $V_2 = V_1 \sqrt{\frac{P_2}{P_1}}$

(See page 12 for symbol definitions.)